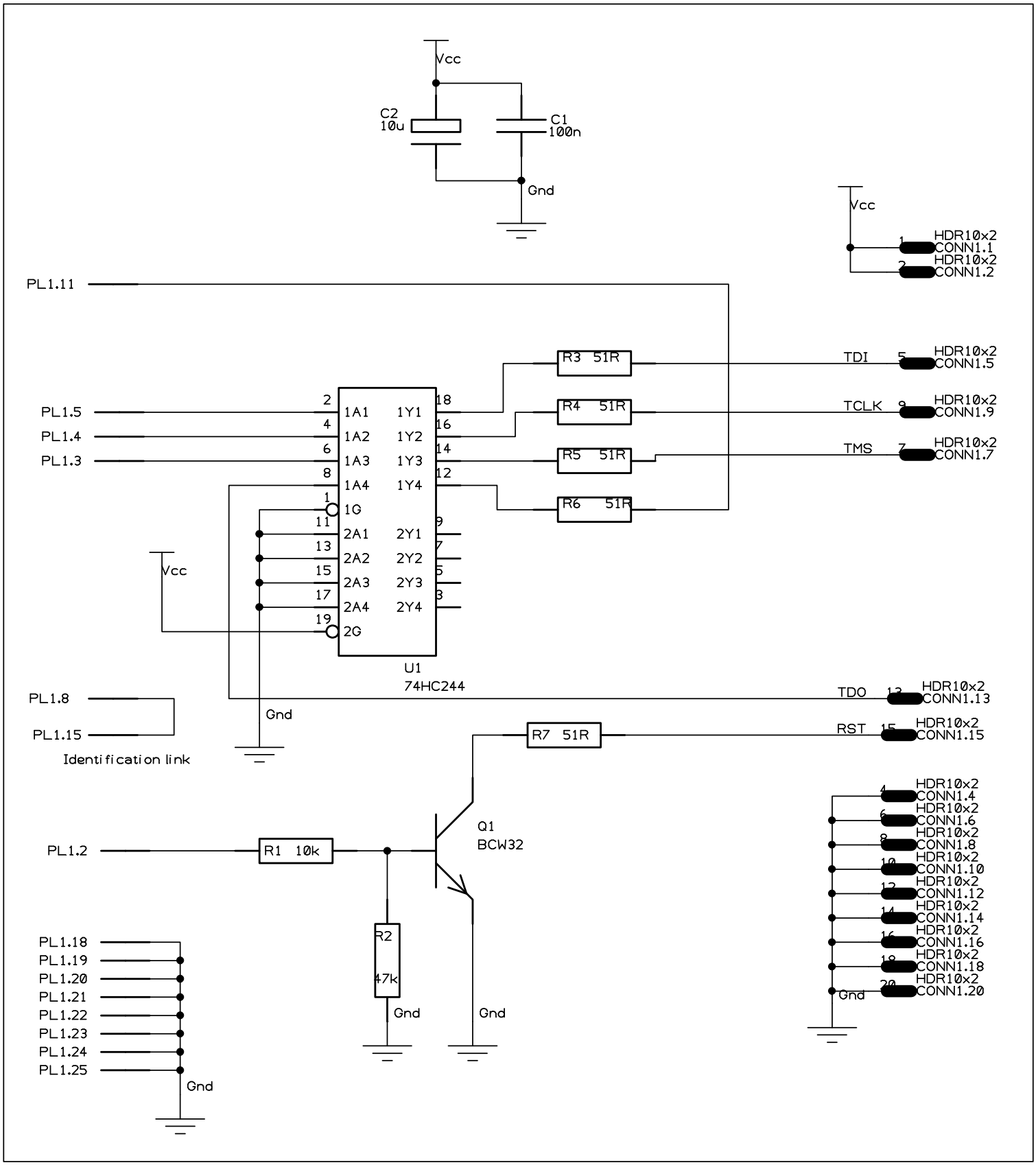
Vcc
C2
10u
C1
100n
Gnd
Vcc
HDR10x2
CONN1.1
HDR10x2
CONN1.2
PL1.11
R3 51R
TDI
HDR10x2
CONN1.5
PL1.5
PL1.4
PL1.3
R4 51R
TCLK
HDR10x2
CONN1.9
R5 51R
TMS
HDR10x2
CONN1.7
R6 51R
1A1
1A2
1A3
1A4
1G
2A1
2A2
2A3
2A4
2G
1Y1
1Y2
1Y3
1Y4
2Y1
2Y2
2Y3
2Y4
Vcc
U1
74HC244
PL1.8
PL1.15
Identification link
Gnd
TDO
HDR10x2
CONN1.13
R7 51R
RST
HDR10x2
CONN1.15
Q1
BCW32
PL1.2
R1 10k
R2
47k
Gnd
Gnd
HDR10x2
CONN1.4
HDR10x2
CONN1.6
HDR10x2
CONN1.8
HDR10x2
CONN1.10
HDR10x2
CONN1.12
HDR10x2
CONN1.14
HDR10x2
CONN1.16
HDR10x2
CONN1.18
HDR10x2
CONN1.20
Gnd
PL1.18
PL1.19
PL1.20
PL1.21
PL1.22
PL1.23
PL1.24
PL1.25
Gnd